# TEMPLATE FOR 98TP-00, 98TP-05 & 98TP-40

## FUNCTIONS: ENTRANCE, STOREROOM AND DUMMY

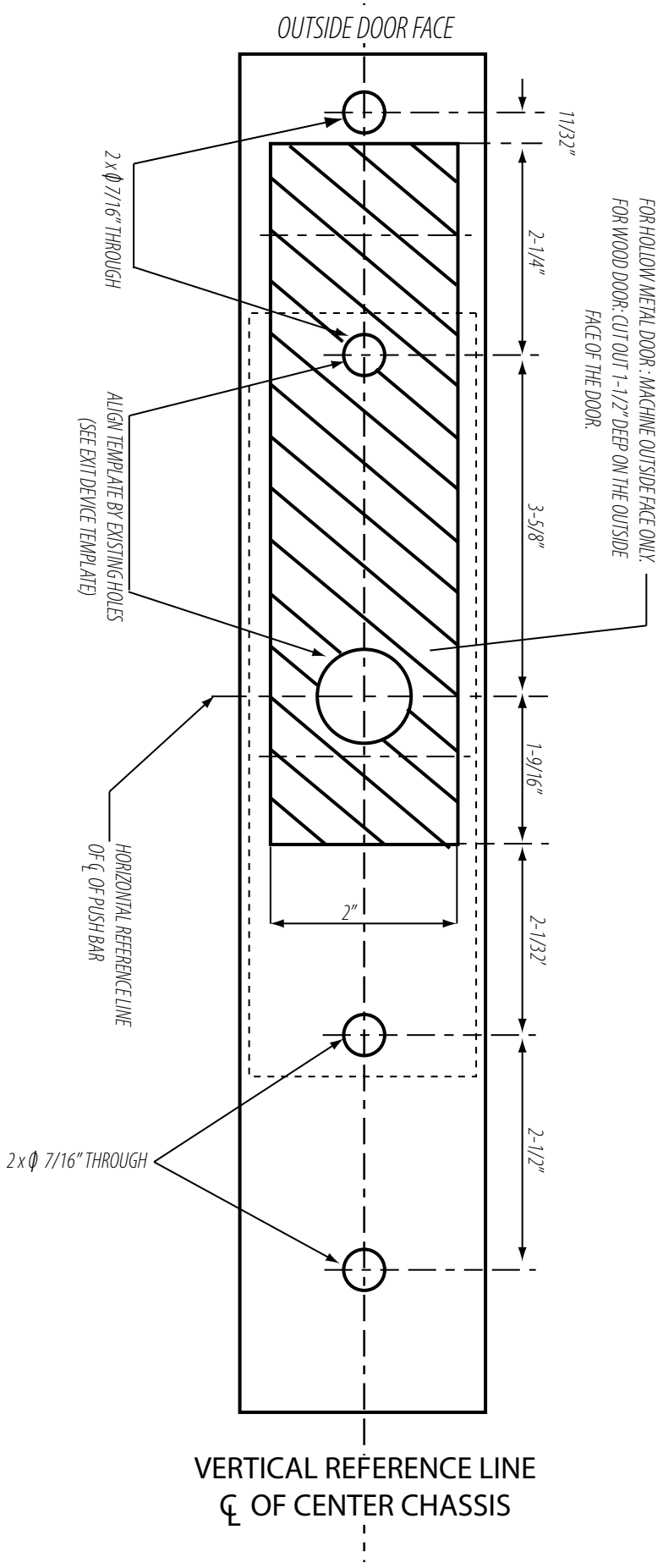


CAL-ROYAL
PRODUCTS, INC.