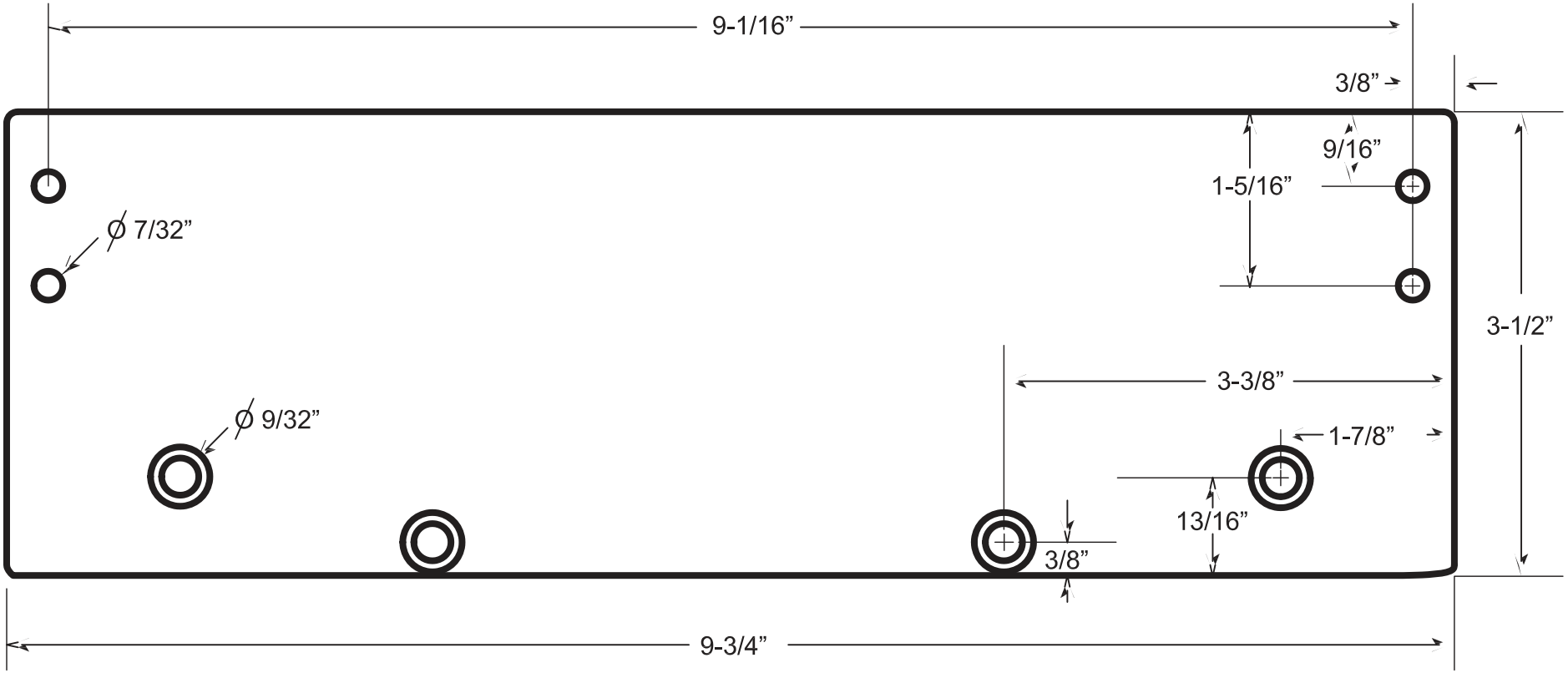

THICKNESS: 3/16”

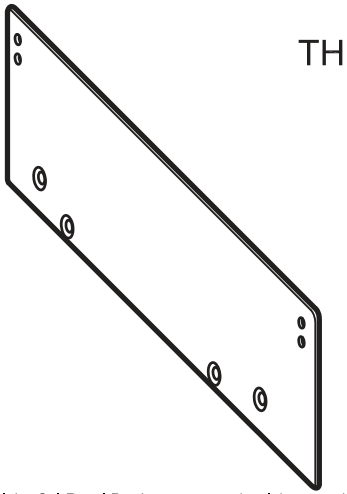

The illustration and technical description in this cut sheet is current as of the date in version date on the right. Cal-Royal Product reserves the right to, and may, on occasions, make changes and/or improvements in designs and dimensions without prior notice.

CAL-ROYAL PRODUCTS, INC. USA
6605 Flotilla Street
City of Commerce
CA 90040 USA
Tel.# (323) 888-6601
FAX # (323) 888-6699
WEB SITE: CAL-ROYAL.COM
Email: sales@cal-royal.com

ITEM NO.	DESCRIPTION :	NOT TO SCALE	UNIT	Prepared By:	DATE	DWG. NO.
704	FLAT DROP BRACKET	PAGE 1 OF 1	PRIMARY DIMENSION SHOWN IN INCHES, DIMENSIONS IN ( ) ARE MM	BBT / AED/ CVL	06/30/2022	DCT 1039 REV ----------