Installation manual for SCS802666

CAL-ROYAL PRODUCTS, INC. USA

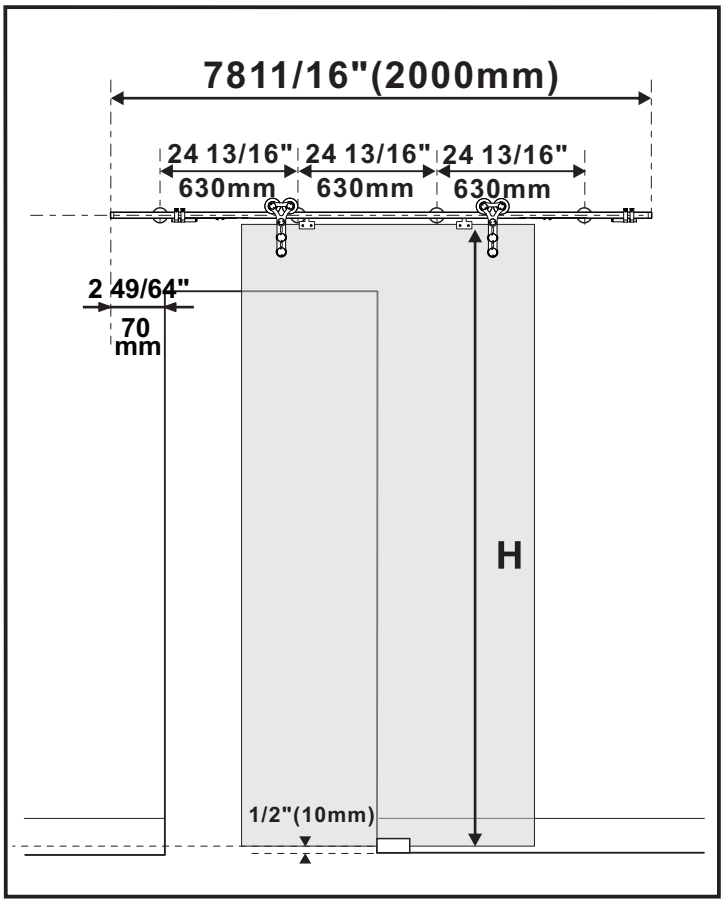

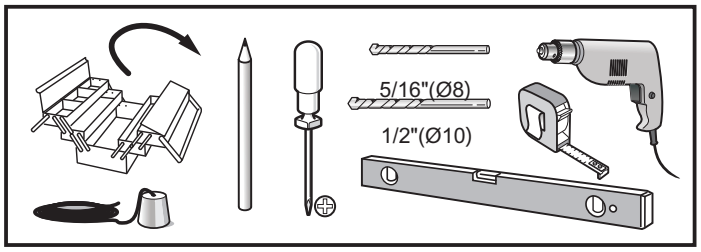

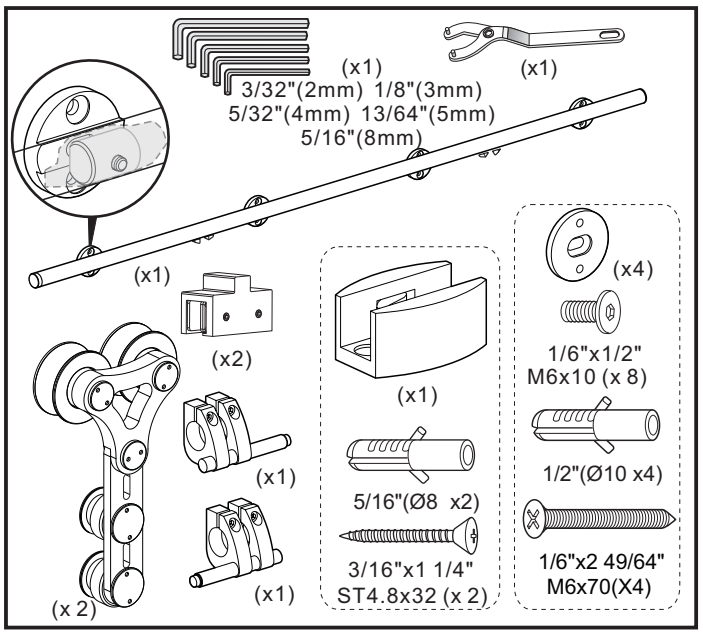

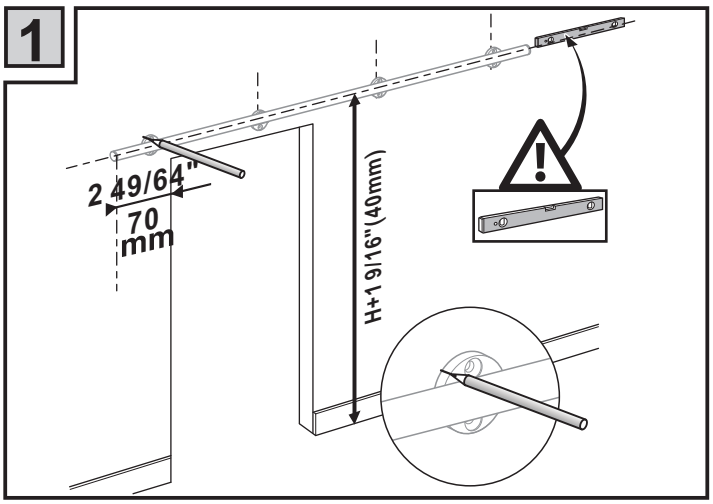

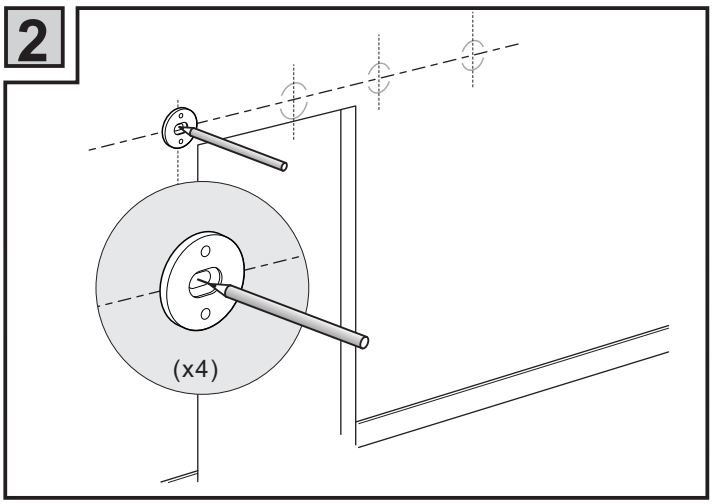

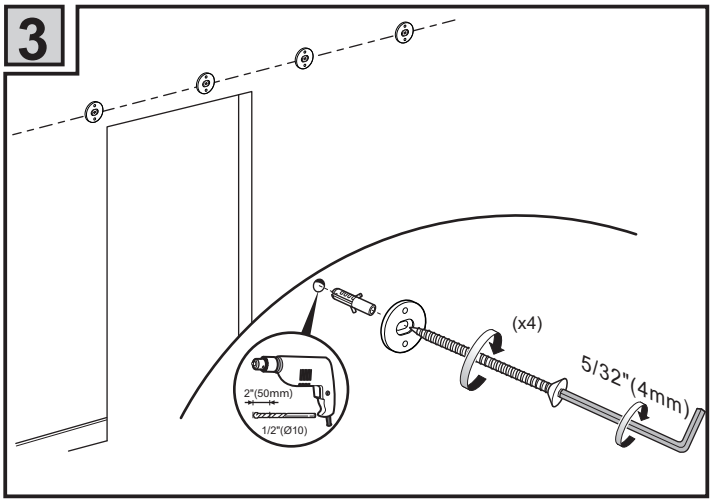

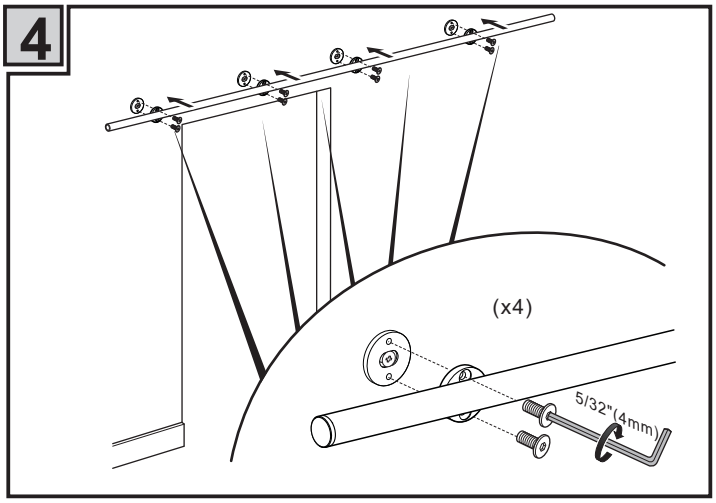

5

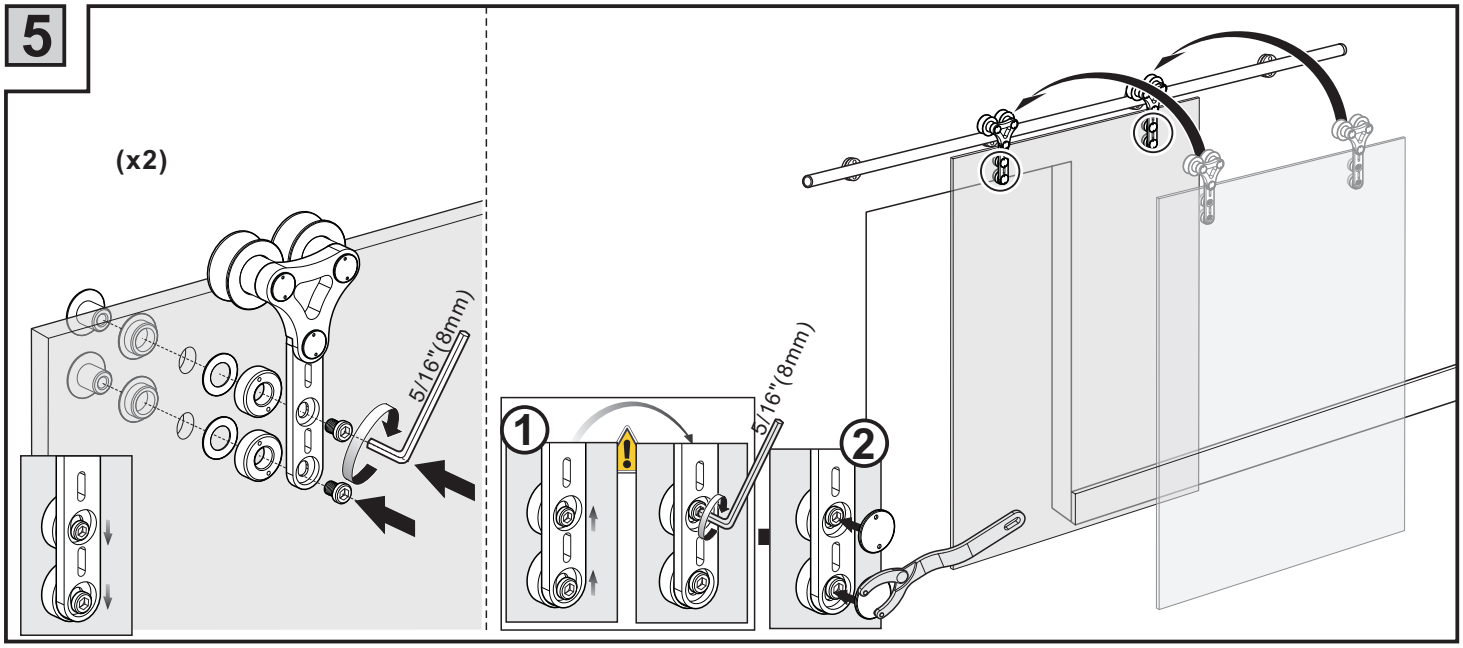
(x2)
5/16"(8mm)
5/16"(8mm)
1
2

6

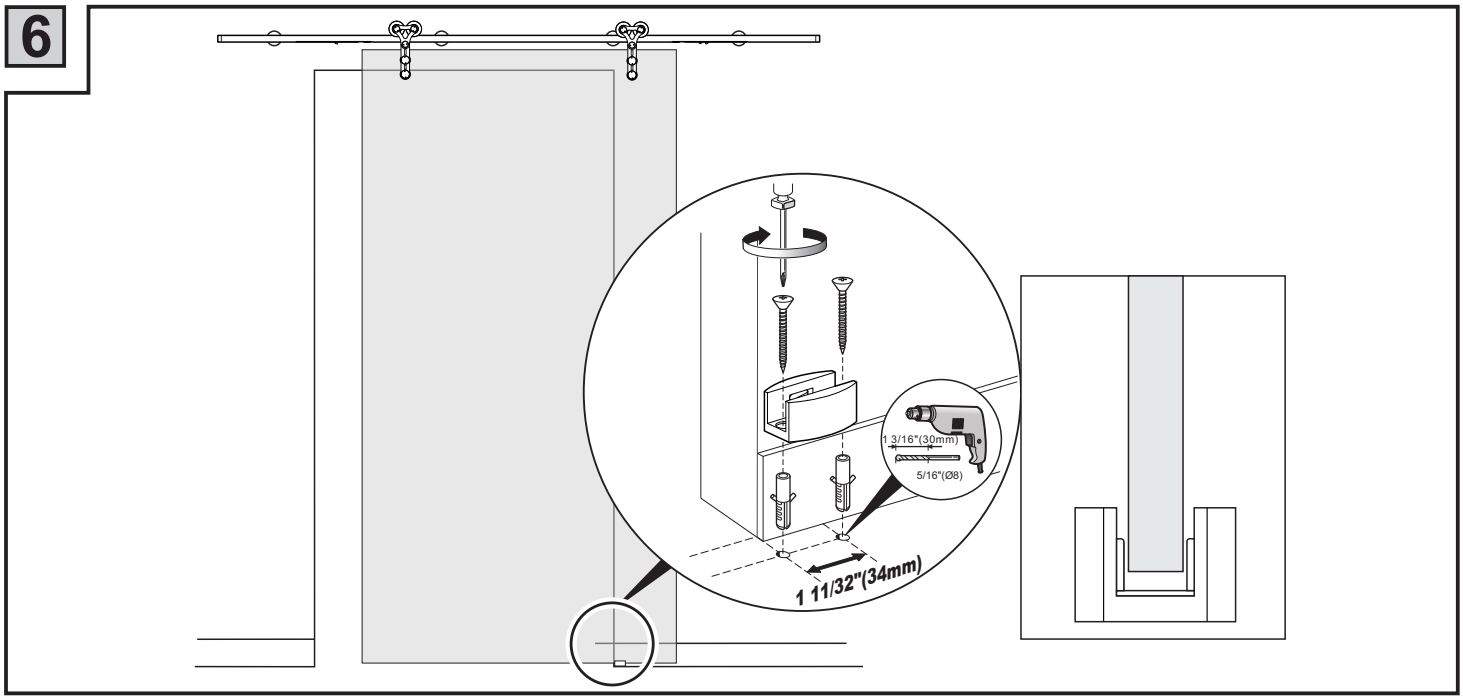
1 3/16"(30mm)
5/16"(Ø8)
1 11/32"(34mm)

7

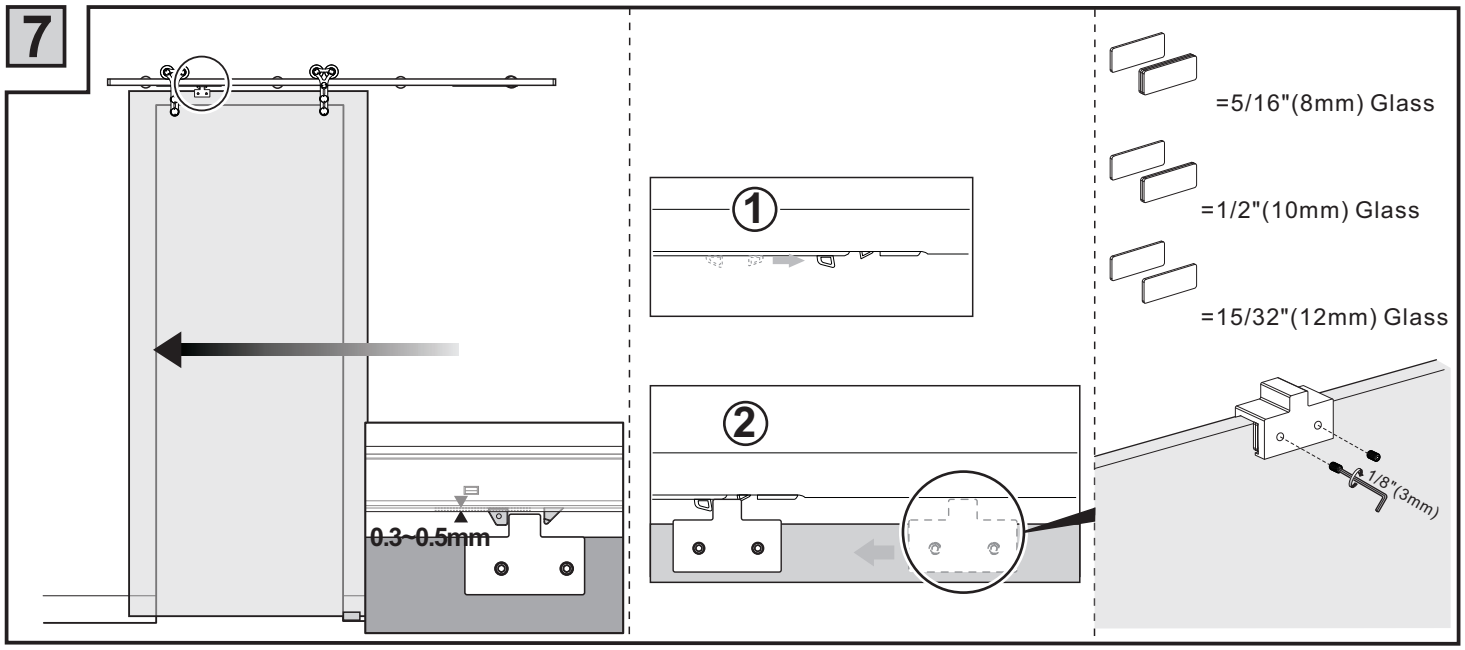
0.3~0.5mm
1
2
=5/16"(8mm) Glass
=1/2"(10mm) Glass
=15/32"(12mm) Glass
1/8"(3mm)

8

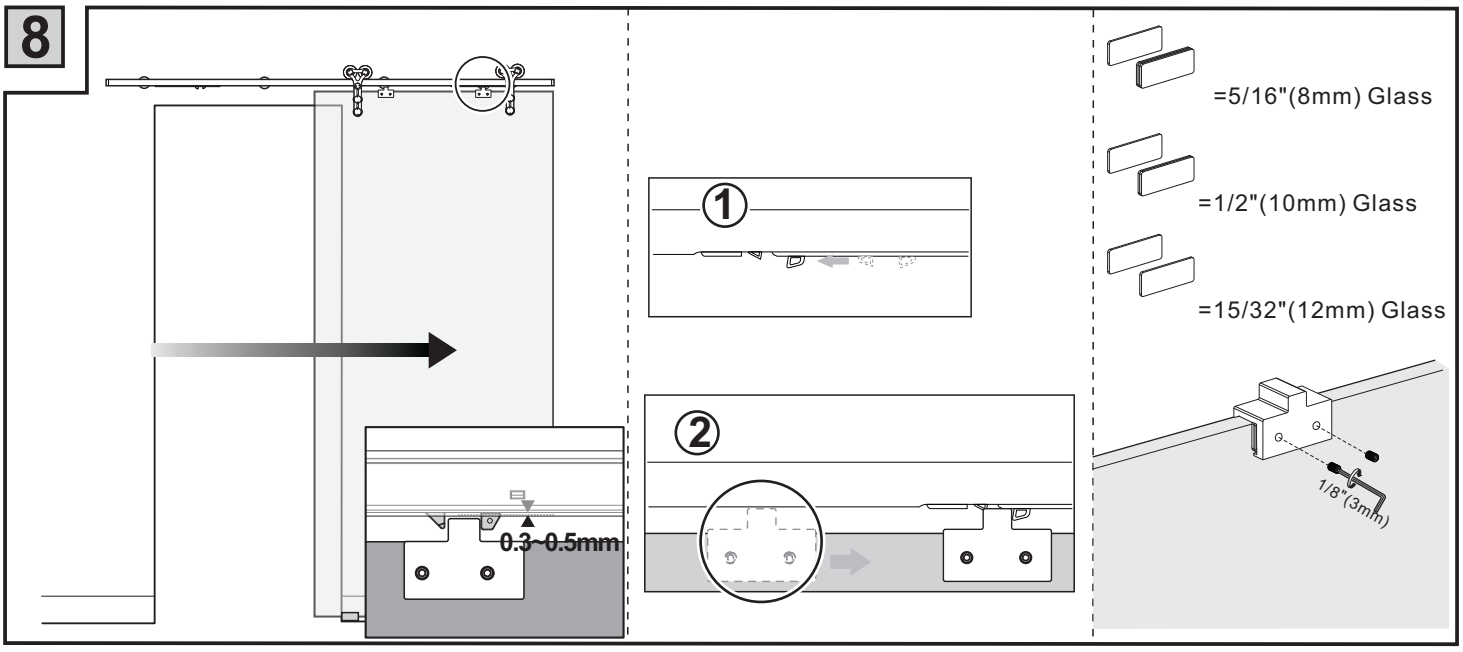
0.3~0.5mm
①
②
=5/16"(8mm) Glass
=1/2"(10mm) Glass
=15/32"(12mm) Glass
1/8"(3mm)

9

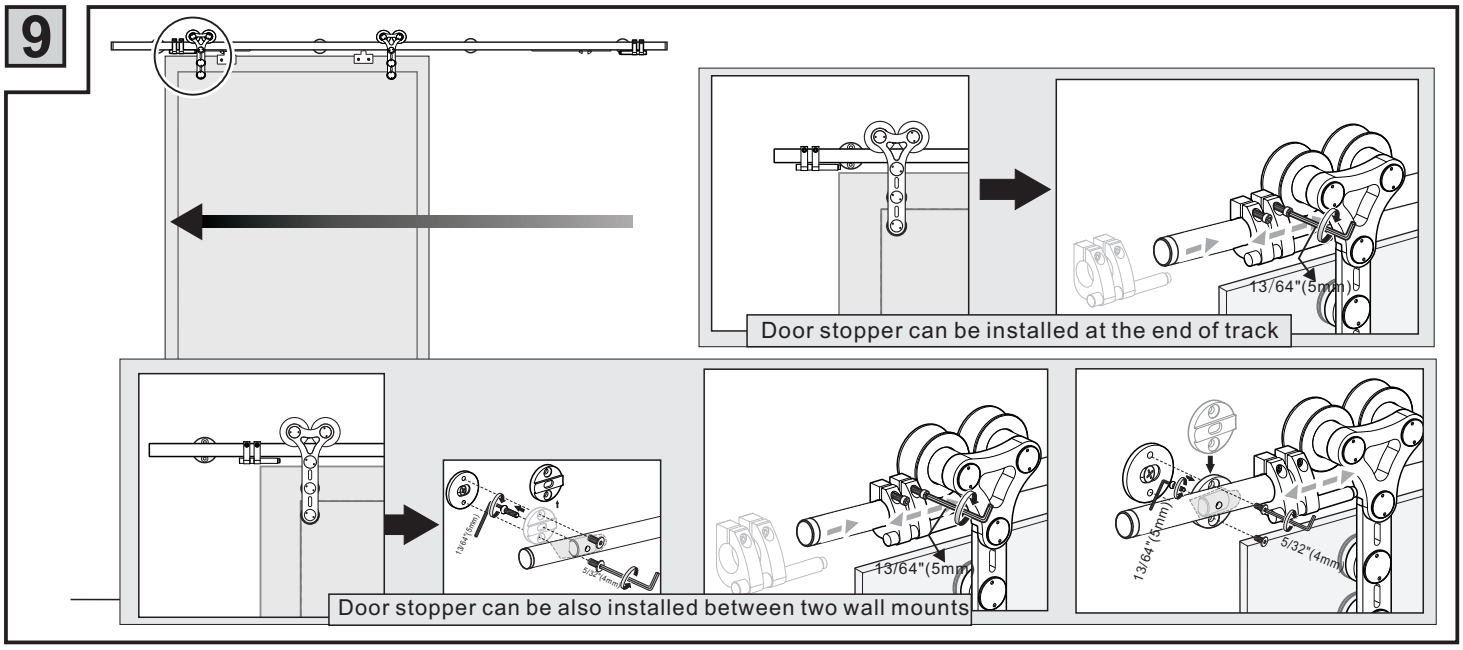
13/64"(5mm)
Door stopper can be installed at the end of track
13/64"(5mm)
5/32"(4mm)
Door stopper can be also installed between two wall mounts

10

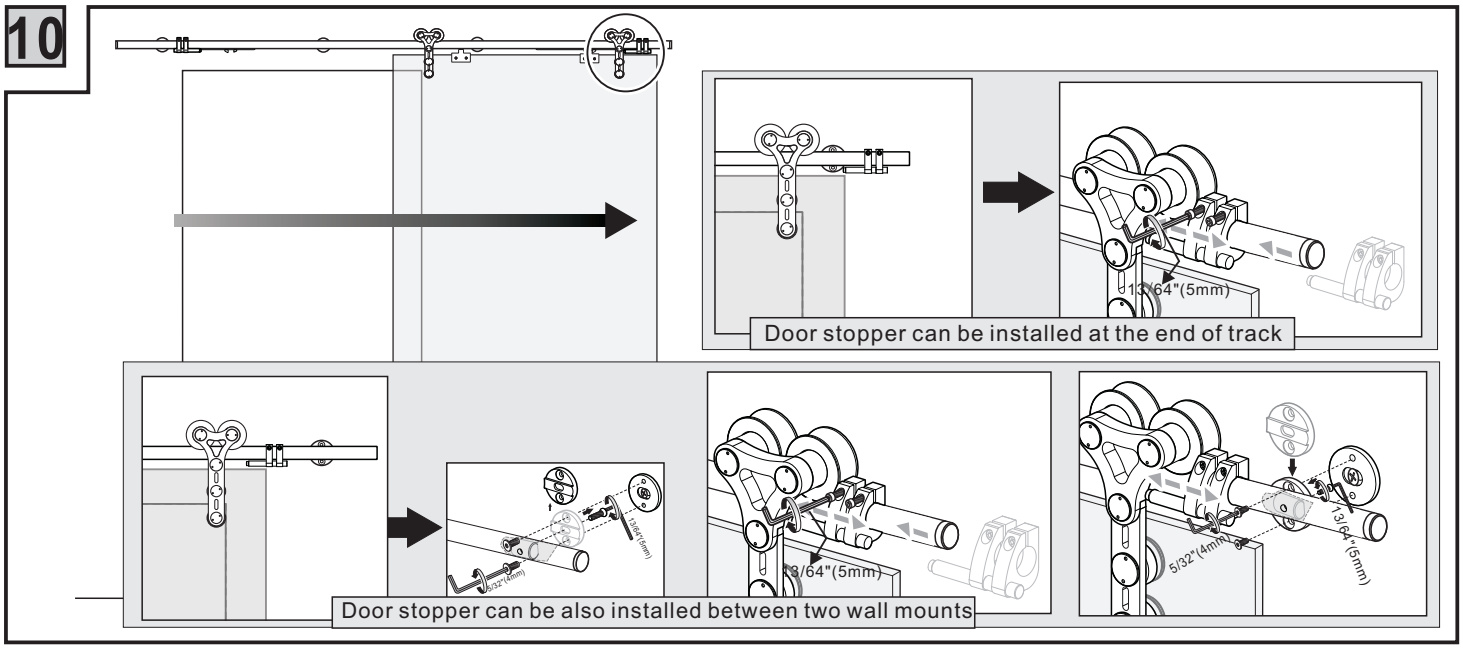
13/64"(5mm)
Door stopper can be installed at the end of track
13/64"(5mm)
5/32"(4mm)
Door stopper can be also installed between two wall mounts

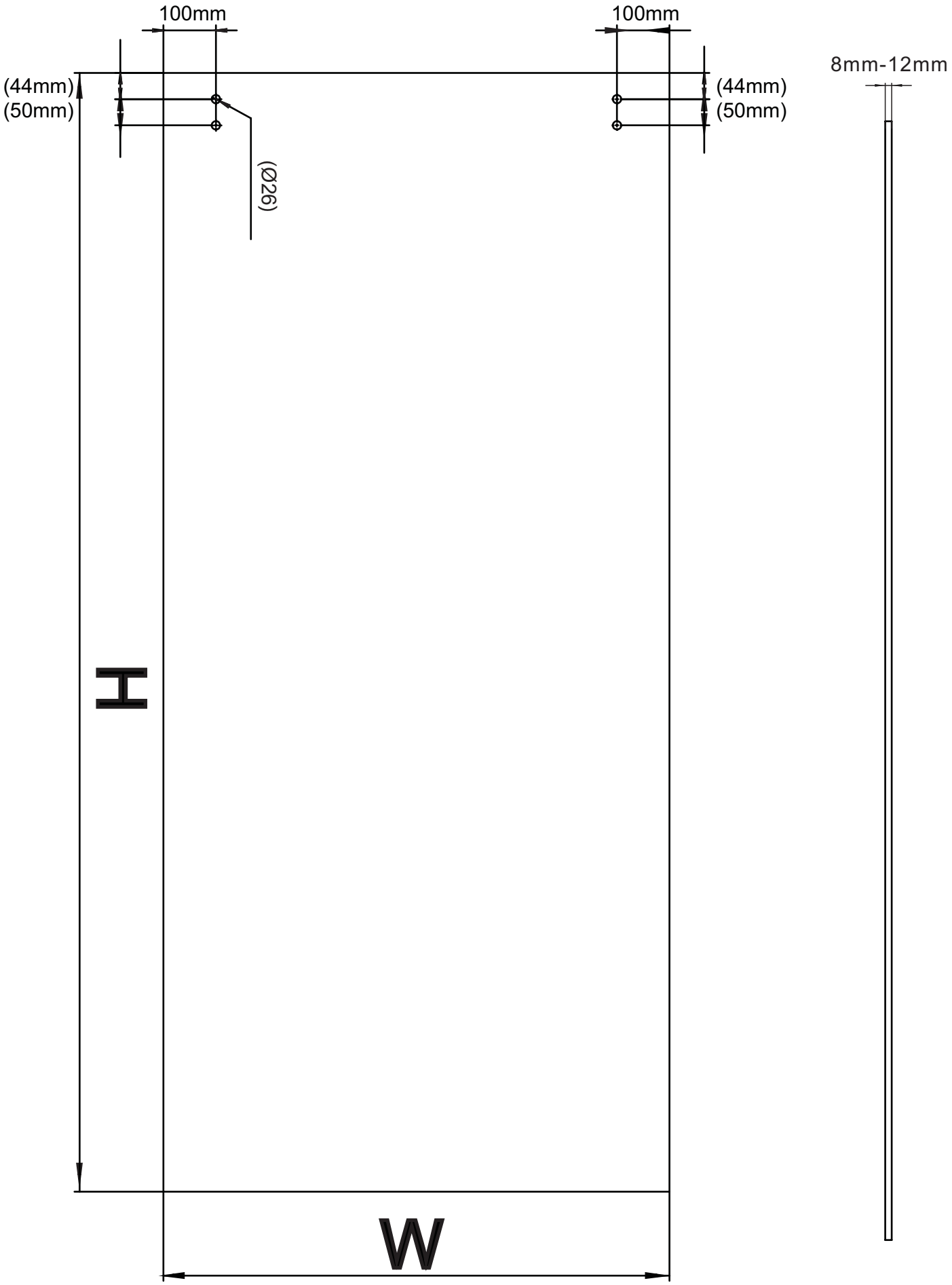
100mm
100mm
8mm-12mm
(44mm)
(50mm)
(44mm)
(50mm)
(Ø26)
H
W