Installation Manual for SCSBDH3066

CAL-ROYAL PRODUCTS, INC. USA

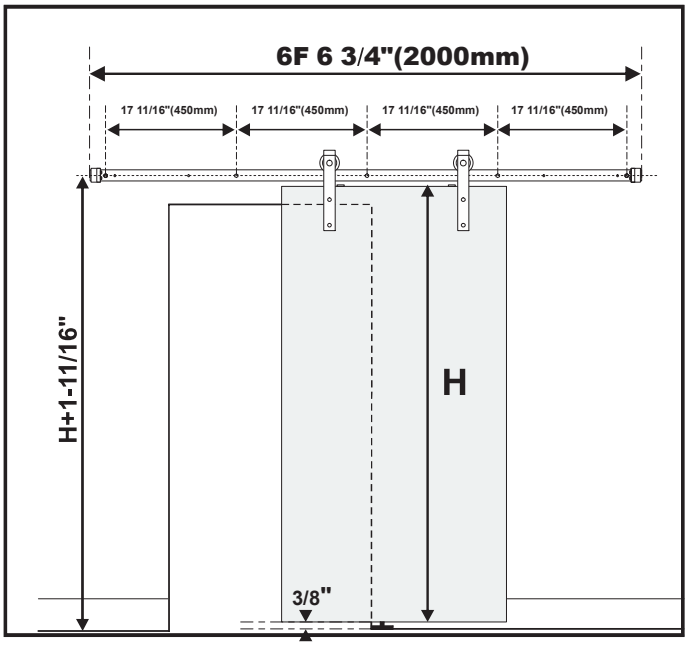

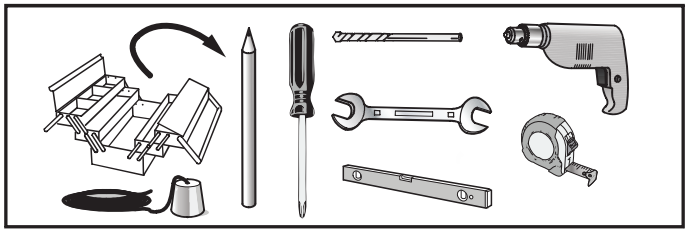

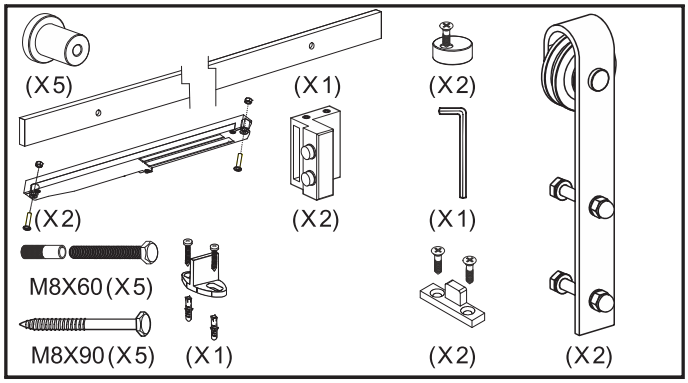

1

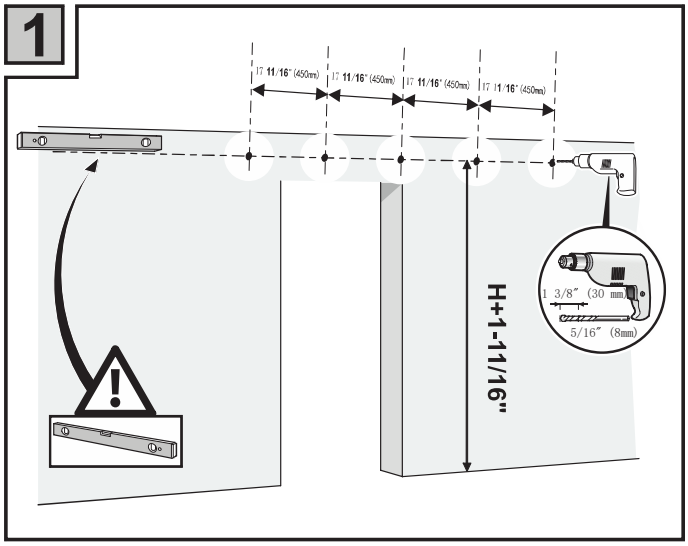

3

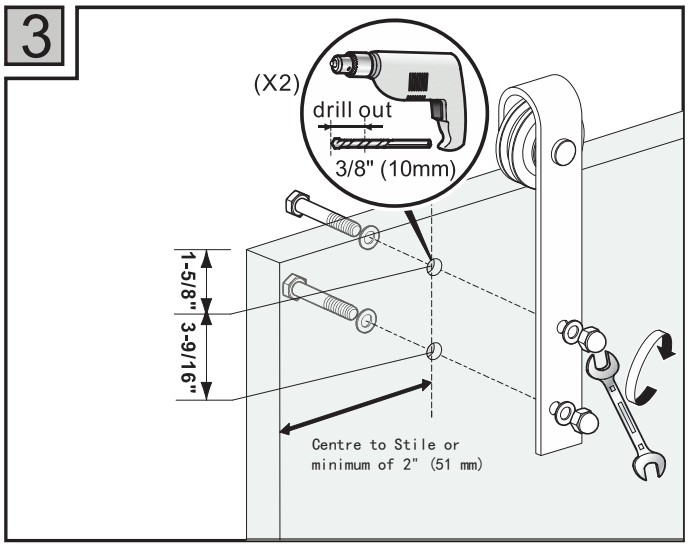

2

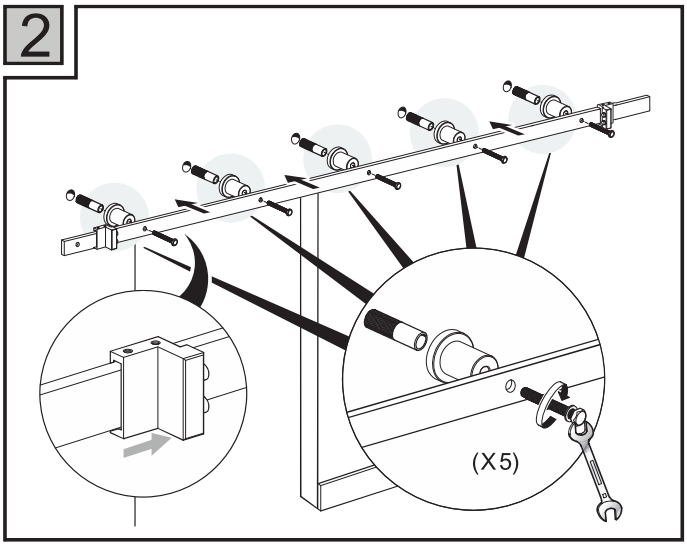

4

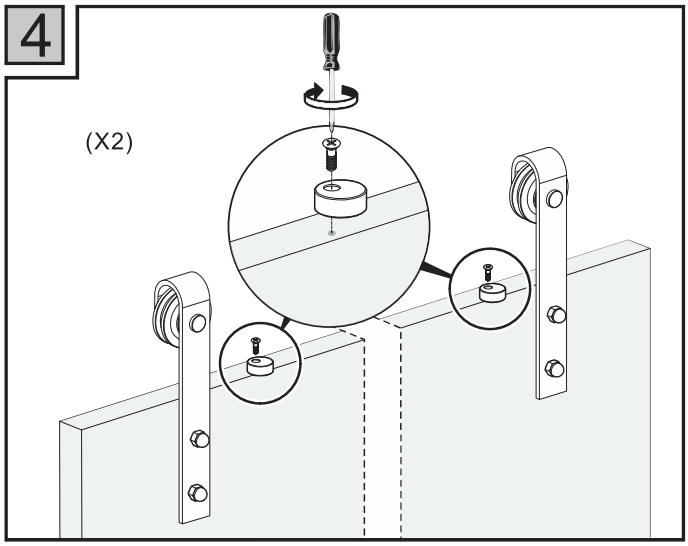

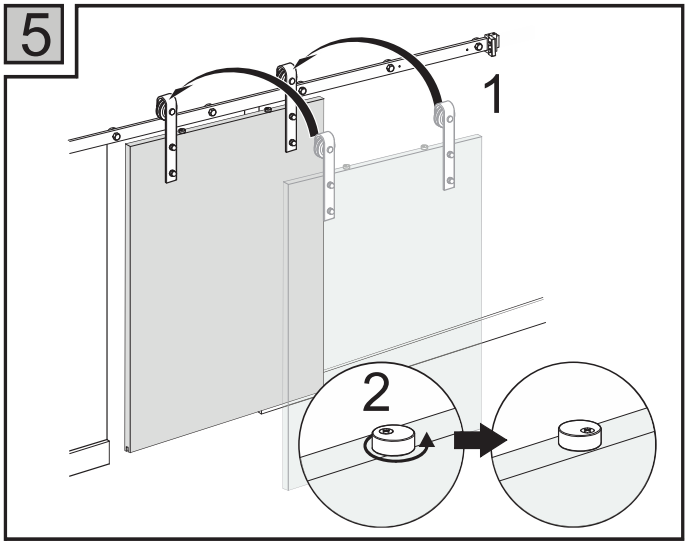
5
1
2

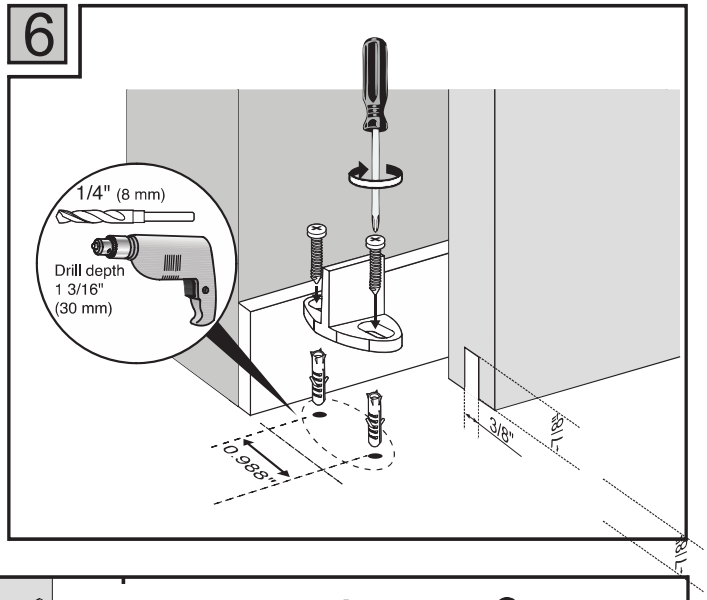
6
1/4" (8 mm)
Drill depth
1 3/16"
(30 mm)
10.986"
3/8"
1/8"
1/8"

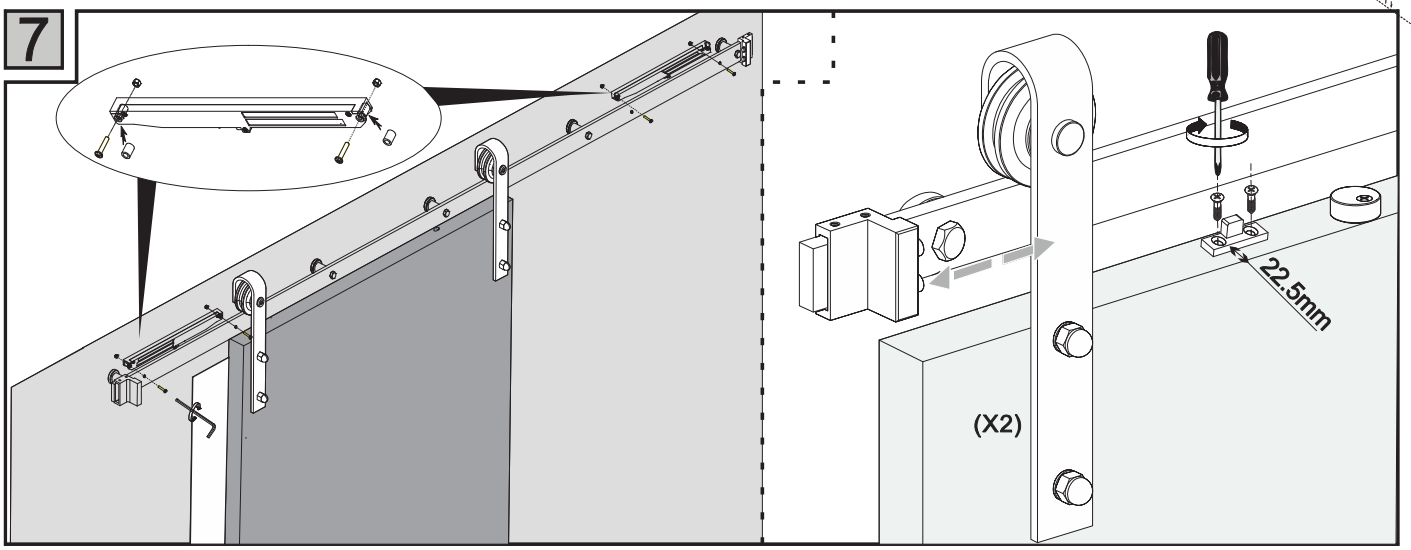
7
22.5mm
(X2)