DAFH8 -Y Double Acting Residential Floor Spring Hinge

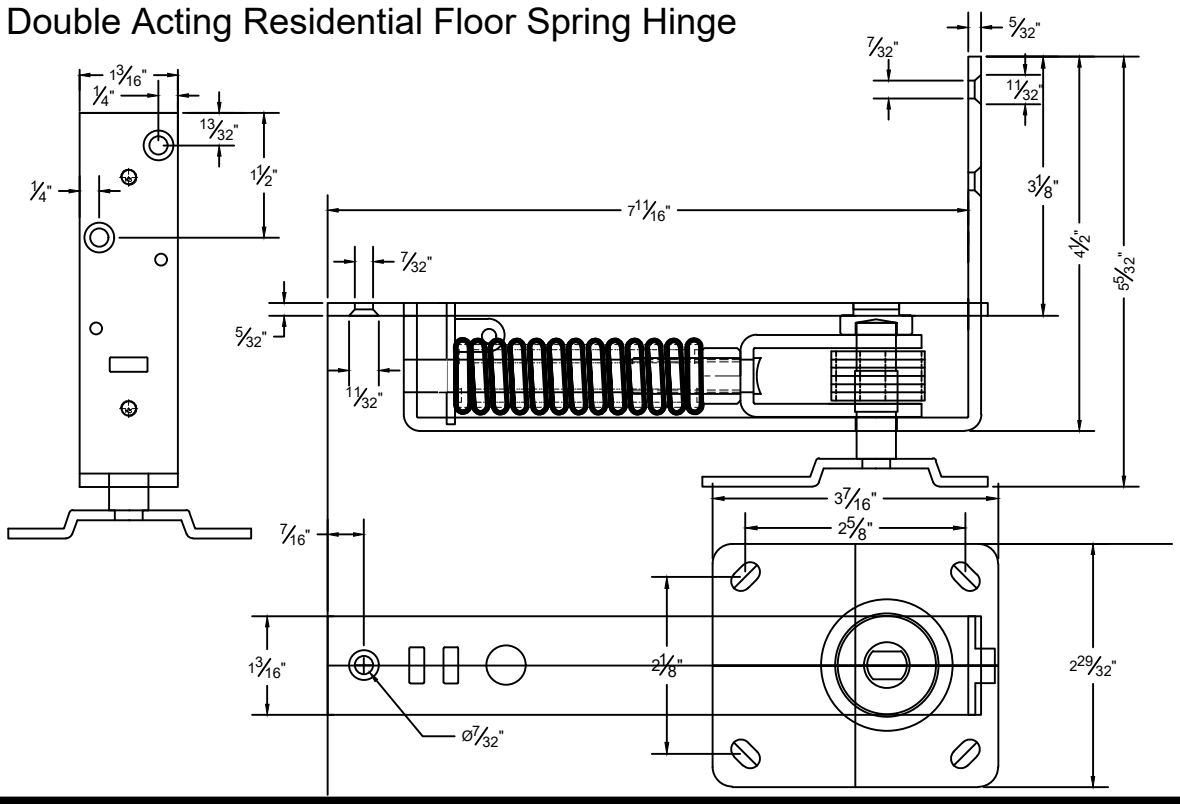

INSTALLATION FOR
1-3/8" To1-3/4"DOORS

1. Trim door to fit opening, 11/16" (17mm) less than height, 1/4" (6mm) less than width.
2. Round off hinge stile of door to 1-1/2" (38mm) radius.
3. Cut mortise for hinge full thickness of door as shown.
4. Center spring on door and screw it in place, attaching end plate with it.
5. Install top pivot to head jamb and top socket to door as shown.
6. Tilt door to engage pivots, align door, wedge in place and screw floor plate to floor. (Sloted holes in plate permit adjustments).
7. Slip tab end of side cover under end plate and screw side cover to door.

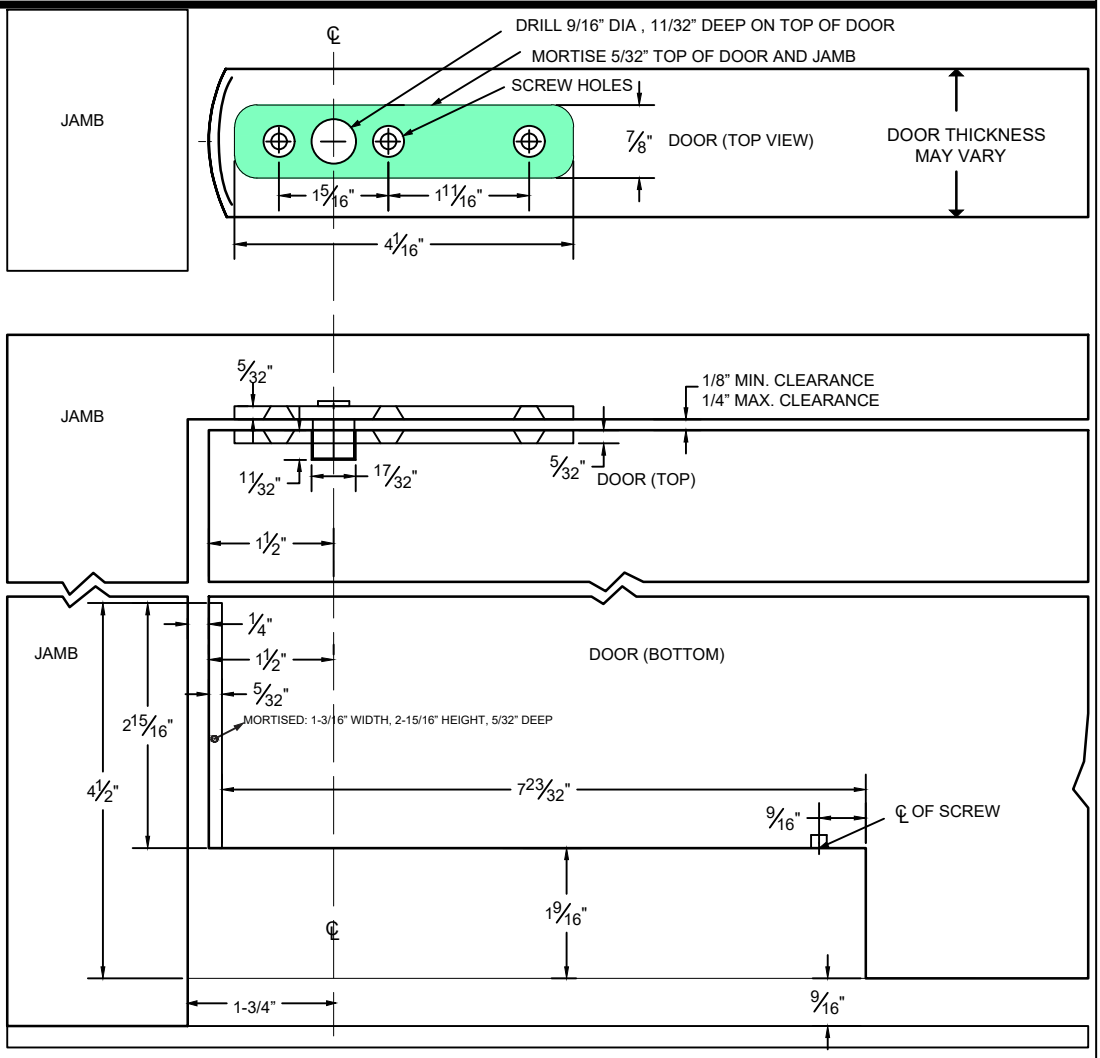

The illustration and technical description in this cut sheet is current as of the date in version date on the right. Cal-Royal Product reserves the right to, and may, on occasions, make changes and/or improvements in designs and dimensions without prior notice.

CAL-ROYAL PRODUCTS, INC. USA
6605 Flotilla Street
City of Commerce
CA 90040 USA
Tel.# (323) 888-6601
FAX # (323) 888-6699
WEB SITE:
CAL-ROYAL.COM
Email: sales@cal-royal.com

ITEM NO.	DESCRIPTION		UNIT	Prepared By:	DATE	DWG. NO.
DAFH8-Y	TEMPLATE FOR DOUBLE ACTING FLOOR SPRING HINGE	NOT TO SCALE PAGE 1 of 1	PRIMARY DIMENSION SHOWN IN INCHES, DIMENSIONS IN ( ) ARE MM	BBT / ADG / CVL	01/29/24	BHT-7000-01/24- 2of2 Ver.